# IEG313-Quantum Computing for Engineers: Theory and Applications

Dr. Rubell Marion Lincy G.
Assistant Professor and Head of the Department,
Computer Science and Engineering
Indian Institute of Information Technology Kottayam
https://www.iiitkottayam.ac.in/#!/faculty/lincy
Contact: lincy@iiitkottayam.ac.in

# Outline

1. Quantum Circuits
2. Quantum Circuits - Truth table

IEG313

# Quantum Circuit

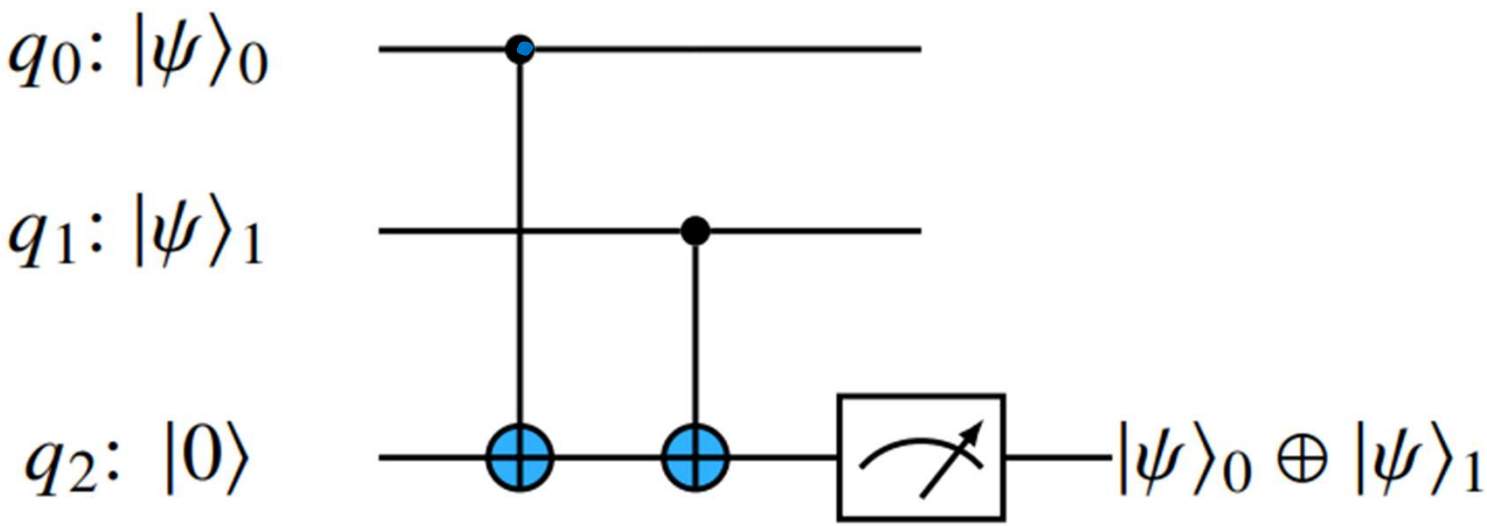


Ancilla qubit

# Quantum Circuits

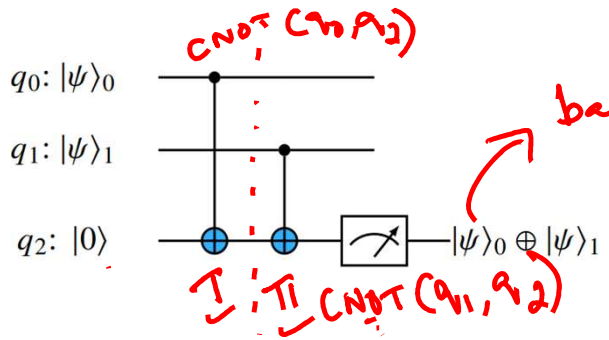


basis states $|\psi\rangle_0 = \alpha_0 |0\rangle_0 + \beta_0 |1\rangle_0$

XOR operation using ancilla qubit.

Stored in $q_2$.

| Input | | | I | | | II | | |
|---|---|---|---|---|---|---|---|---|
| $q_0$ | $q_1$ | $q_2$ | $q_0$ | $q_1$ | $q_2$ | $q_0$ | $q_1$ | $q_2$ |
| 0 | 0 | 0 | 0 | 0 | 0 | 0 | 0 | 0 |
| 0 | 1 | 0 | 0 | 1 | 0 | 0 | 1 | 1 |
| 1 | 0 | 0 | 1 | 0 | 1 | 1 | 0 | 1 |
| 1 | 1 | 0 | 1 | 1 | 1 | 1 | 1 | 0 |

~~| 0 | 0 | 1 |~~
~~| 0 | 1 | 1 |~~
~~| 1 | 0 | 1 |~~
~~| 1 | 1 | 1 |~~

if $q_2 = |\psi\rangle_2$

IEG313

CCNOT $(q_0, q_1, q_2)$

# Toffoli or CCNOT Gate

C1 C2 3 → target

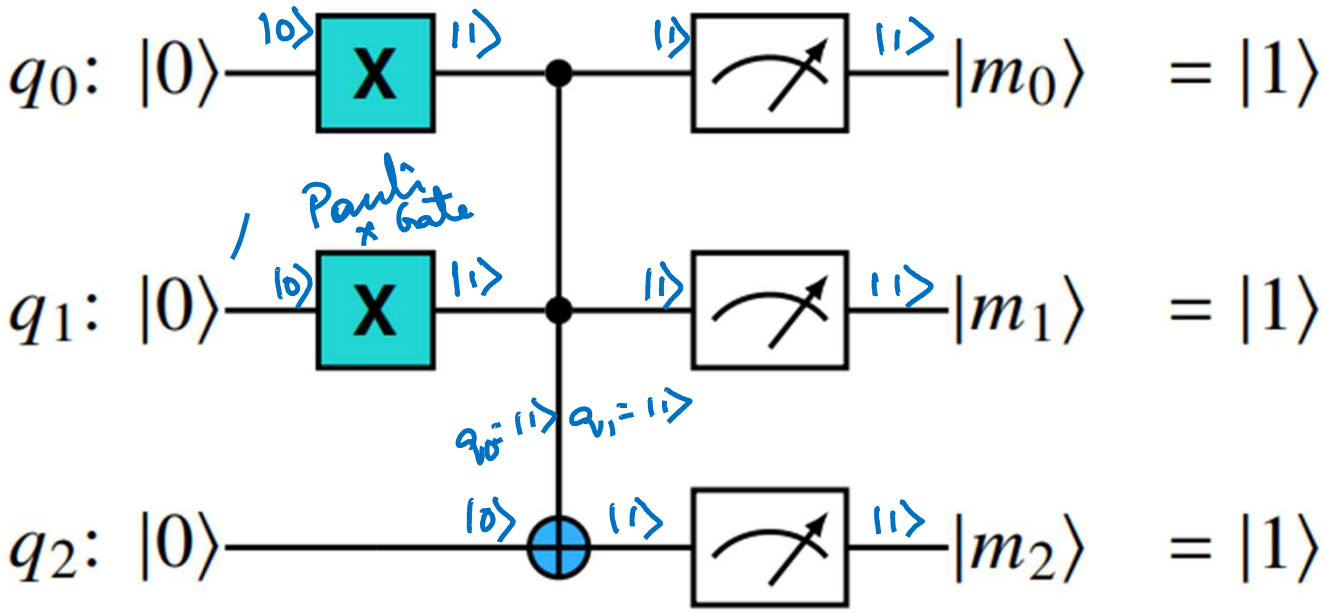

# Quantum Circuits

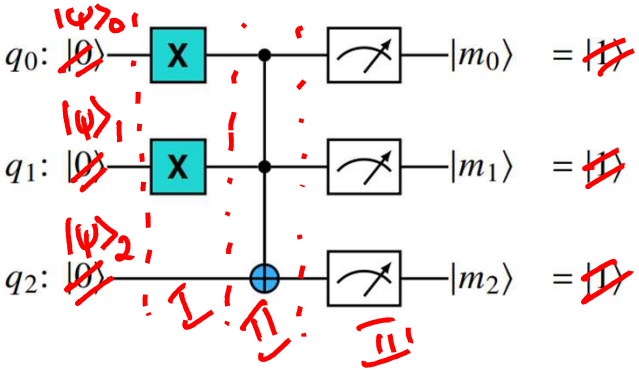


| Input | | | I | | | II | | |
|---|---|---|---|---|---|---|---|---|
| $q_0$ | $q_1$ | $q_2$ | $q_0$ | $q_1$ | $q_2$ | $q_0$ | $q_1$ | $q_2$ |
| 0 | 0 | 0 | 1 | 1 | 0 | 1 | 1 | 1 |
| 0 | 0 | 1 | 1 | 1 | 1 | 1 | 1 | 0 |
| 0 | 1 | 0 | 1 | 0 | 0 | 1 | 0 | 0 |
| 0 | 1 | 1 | 1 | 0 | 1 | 1 | 0 | 1 |
| 1 | 0 | 0 | 0 | 1 | 0 | 0 | 1 | 0 |
| 1 | 0 | 1 | 0 | 1 | 1 | 0 | 1 | 1 |
| 1 | 1 | 0 | 0 | 0 | 0 | 0 | 1 | 0 |
| 1 | 1 | 1 | 0 | 0 | 1 | 0 | 0 | 1 |

Matrix Representation of Toffoli Gate.

Mid Sem.

IEG313

# Circuit with 2 qubits register

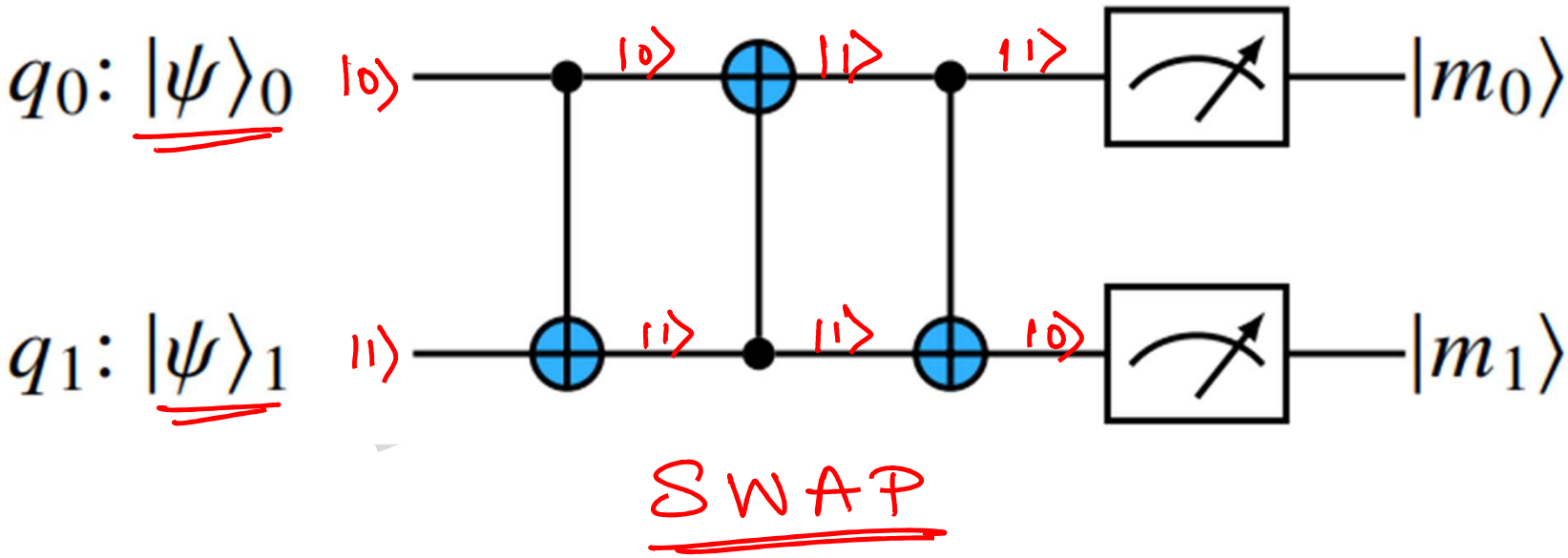

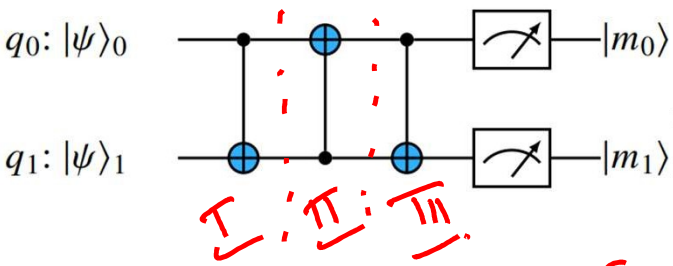


# Quantum Circuits

| Input | | CNOT($q_0$,$q_1$) I | | CNOT($q_1$,$q_0$) II | | CNOT($q_0$,$q_1$) III | |
|---|---|---|---|---|---|---|---|
| $q_0$ | $q_1$ | $q_0$ | $q_1$ | $q_0$ | $q_1$ | $q_0$ | $q_1$ |
| 0 | 0 | 0 | 0 | 0 | 0 | 0 | 0 |
| 0 | 1 | 0 | 1 | 1 | 1 | 1 | 0 |
| 1 | 0 | 1 | 1 | 0 | 1 | 0 | 1 |
| 1 | 1 | 1 | 0 | 1 | 0 | 1 | 1 |

SWAP Gate using 3 CNOT Gates.

IEG313

$H(|0\rangle) = |+\rangle$
$= \frac{|0\rangle + |1\rangle}{\sqrt{2}}$

# Quantum Circuit

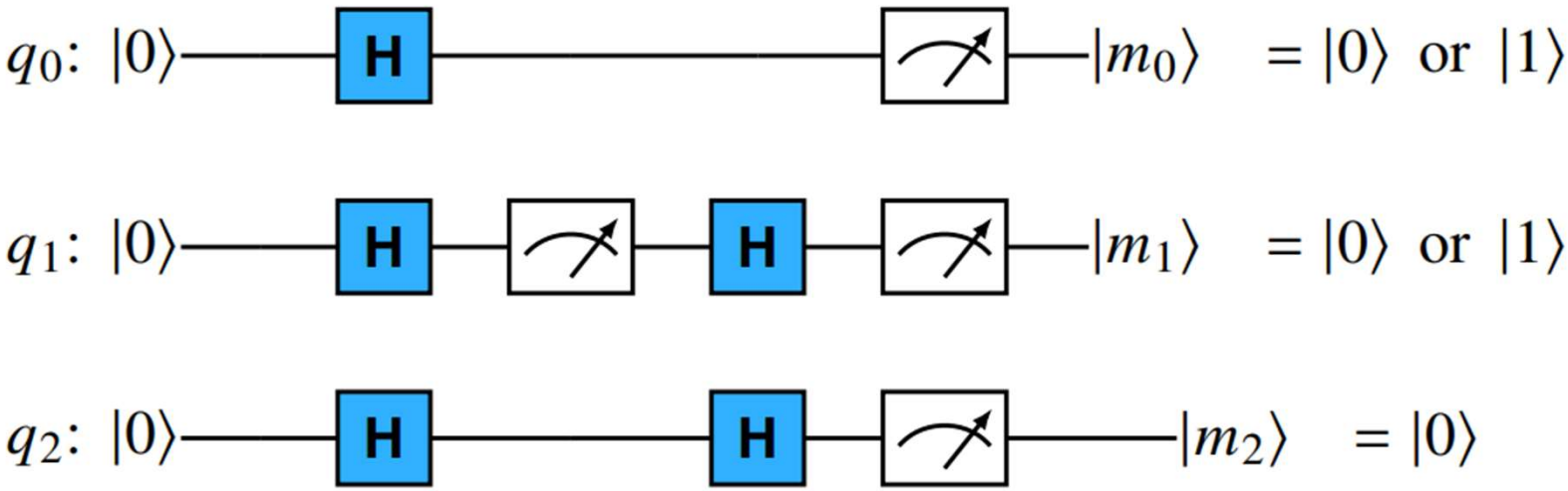

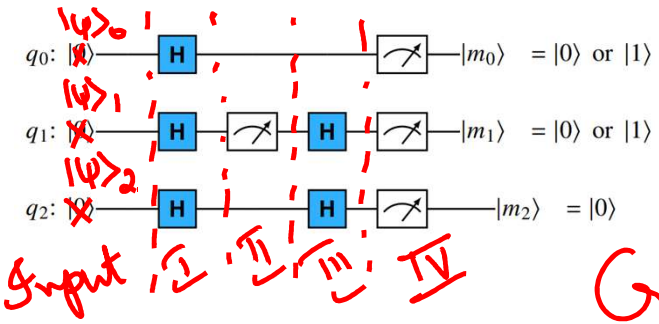


# Quantum Circuits

Create a table for the given circuit and discuss the changes in each phase. Input, I, II, III & IV.

IEG313

# Reverse CNOT

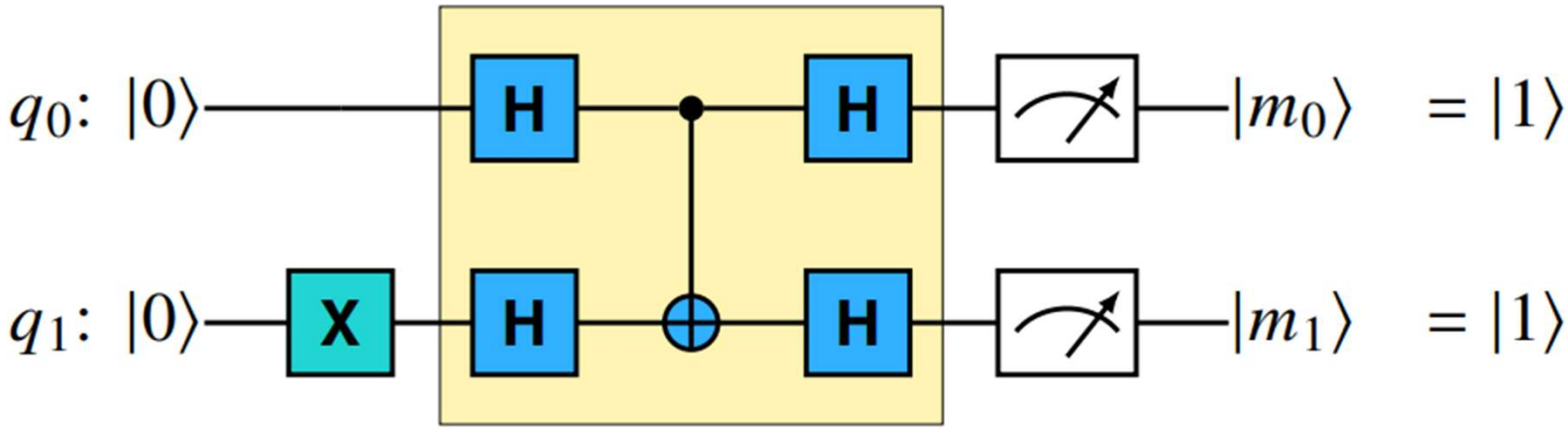

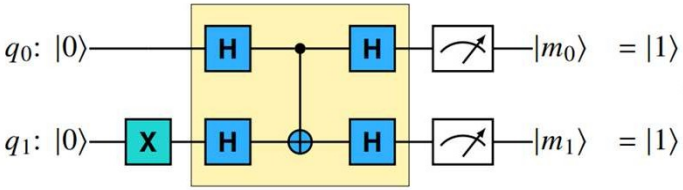


# Quantum Circuits

IEG313

# Circuit with 2 qubits register

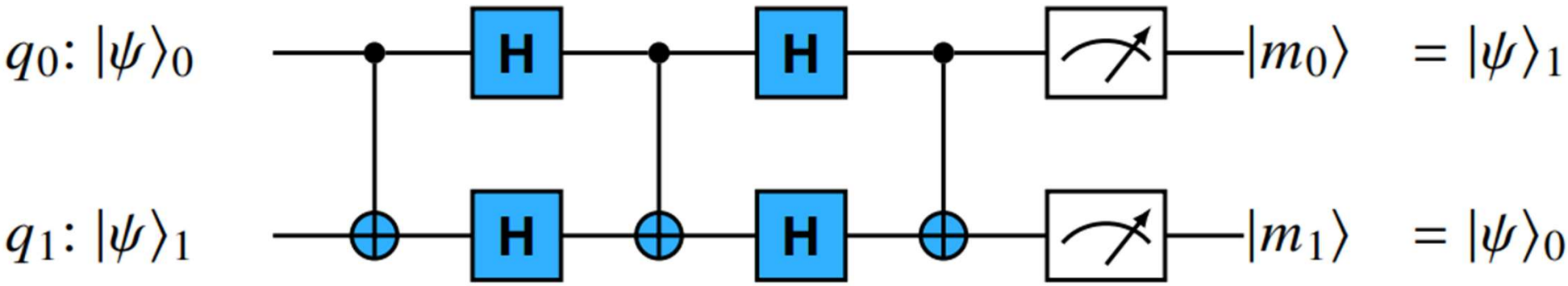

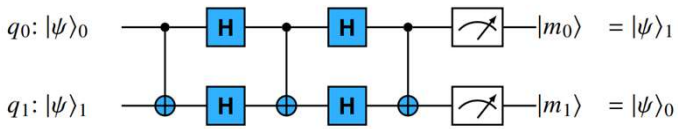


# Quantum Circuits

IEG313

THANK YOU!